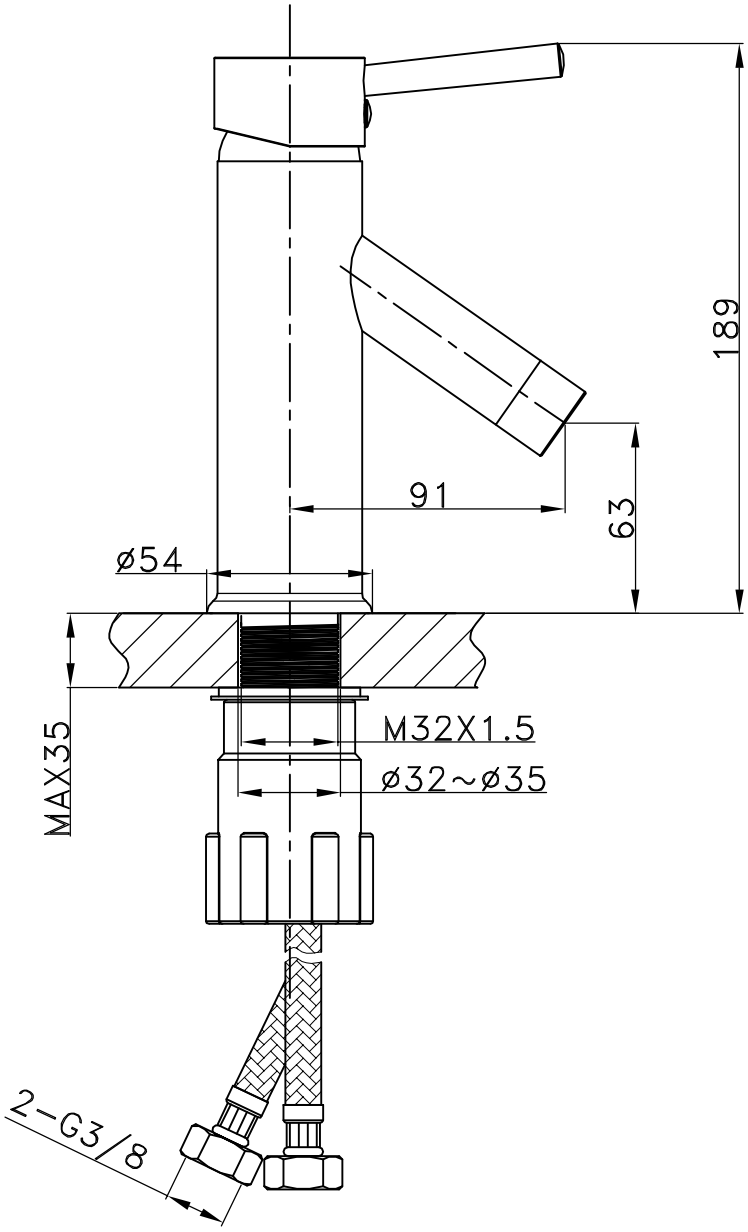

Drawing_No.	H02003>>1101100A
Drawing name: Basin faucet	