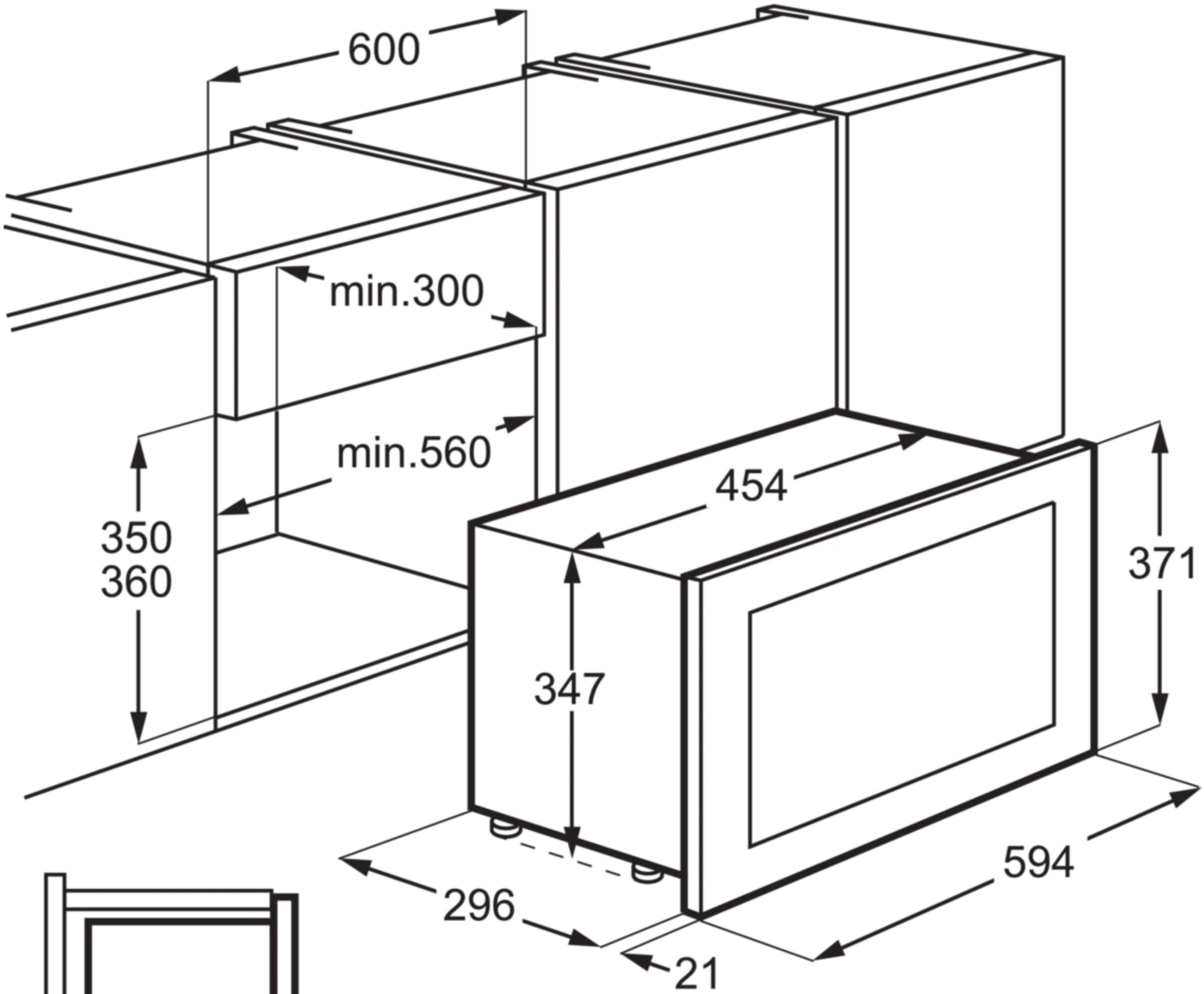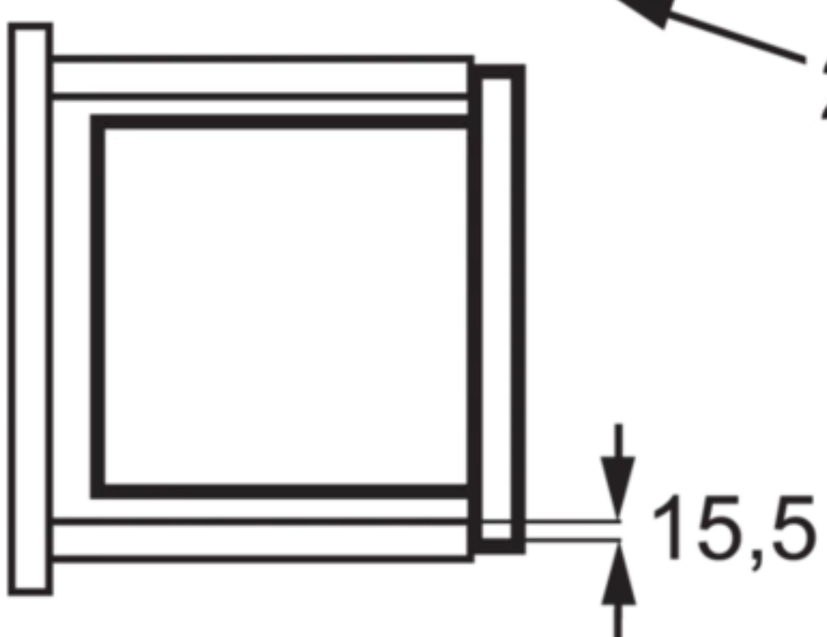PSGBMC190DE00002