Alkymist soapdispenser

Art. No.:
50206

Material:	Stainless steel
Color:	Gunmetal
Surface	Brushed PVD
Max. worktop thickness:	0-35 mm
Container capacity:	500 ml
Hole diameter:	26 mm

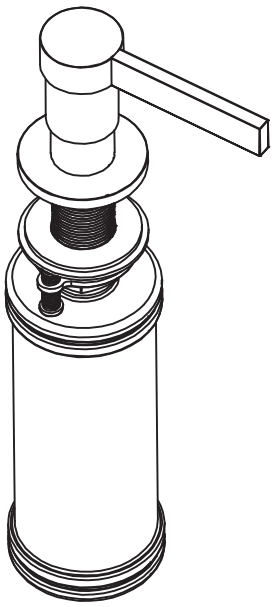

Front

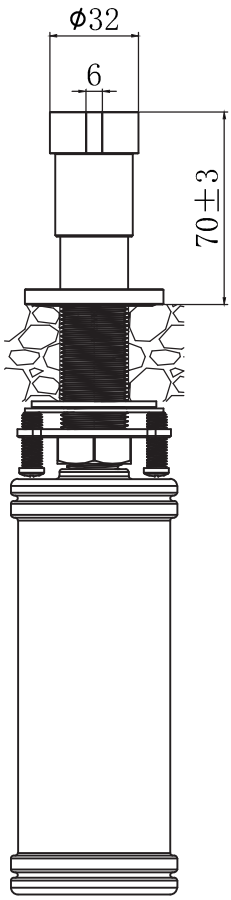

Side

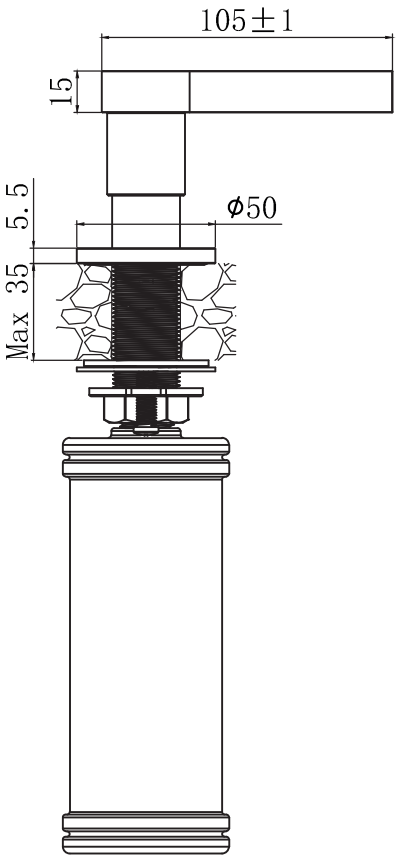

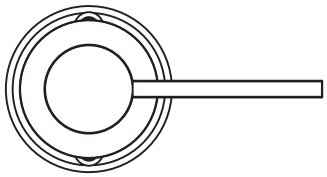

Top

Lavabo A/S - Neptunvej 17 - DK-6000 Kolding
Tlf. +45 75 55 88 66 - E-mail: info@lavabo.dk - www.lavabo.dk