Paulmann

Safety Instructions

0, 1, 2, 4, 6, 7, 10, 11, 12, 15, 16, 22

Info Hotline +49 (0) 5041 998 389
Mon. - Do. 7⁰⁰ - 20⁰⁰
Fr. 7⁰⁰ - 17⁰⁰

Paulmann Licht GmbH
31832 Springe / Germany
www.paulmann.com

Art.-Nr.:
950.77

(+MA 173)
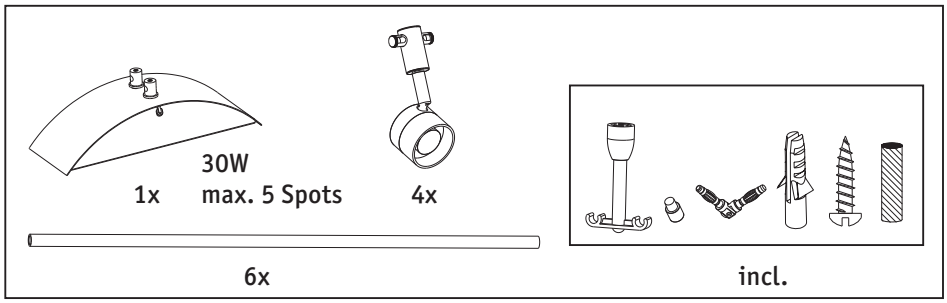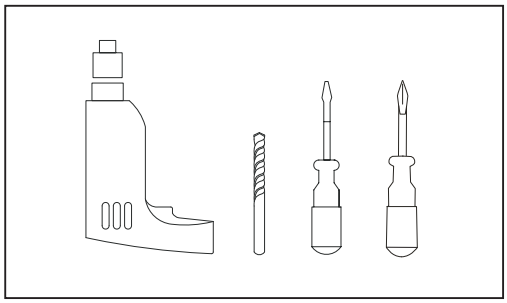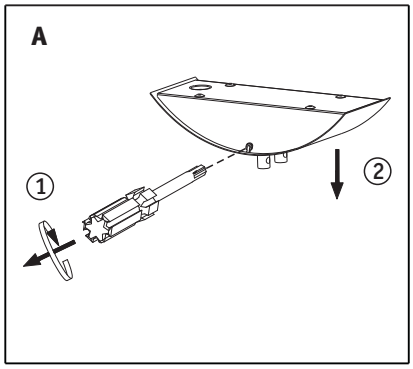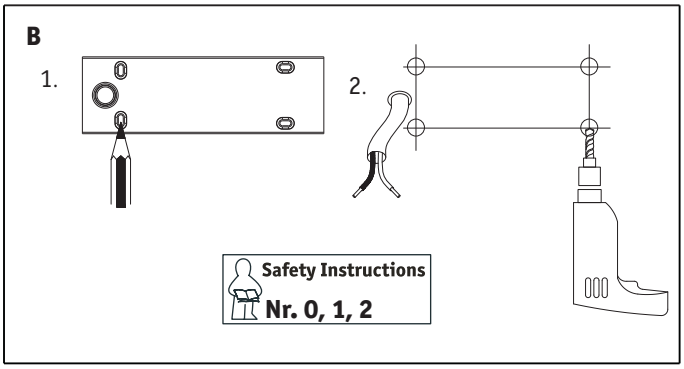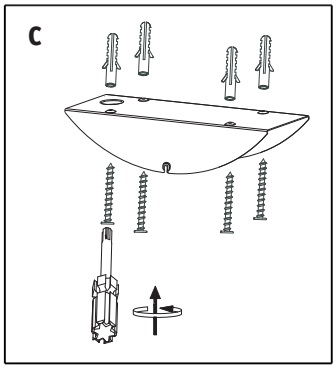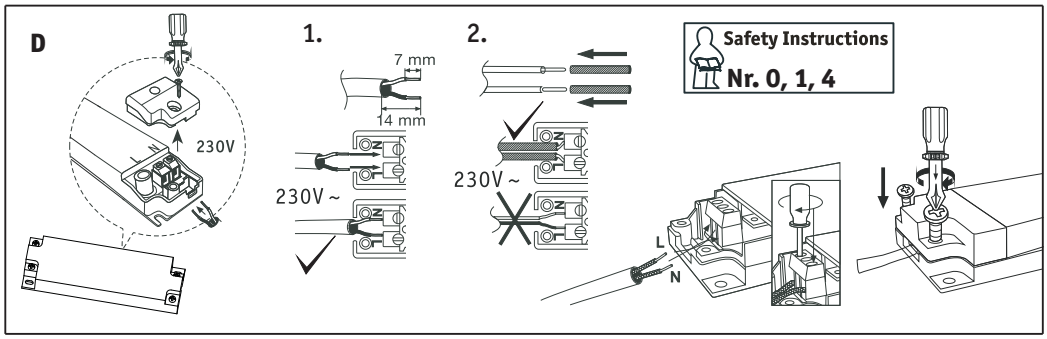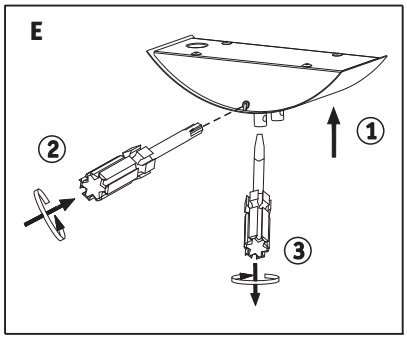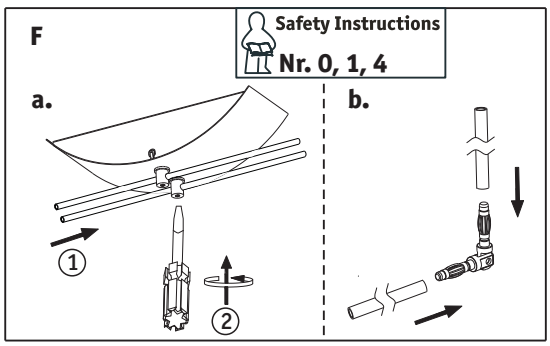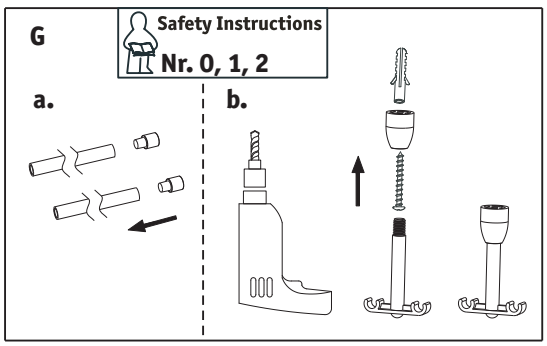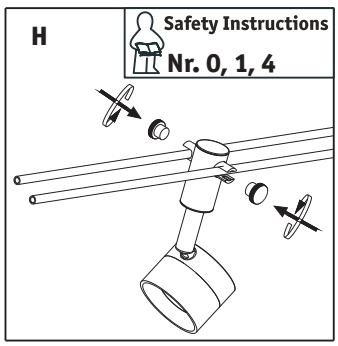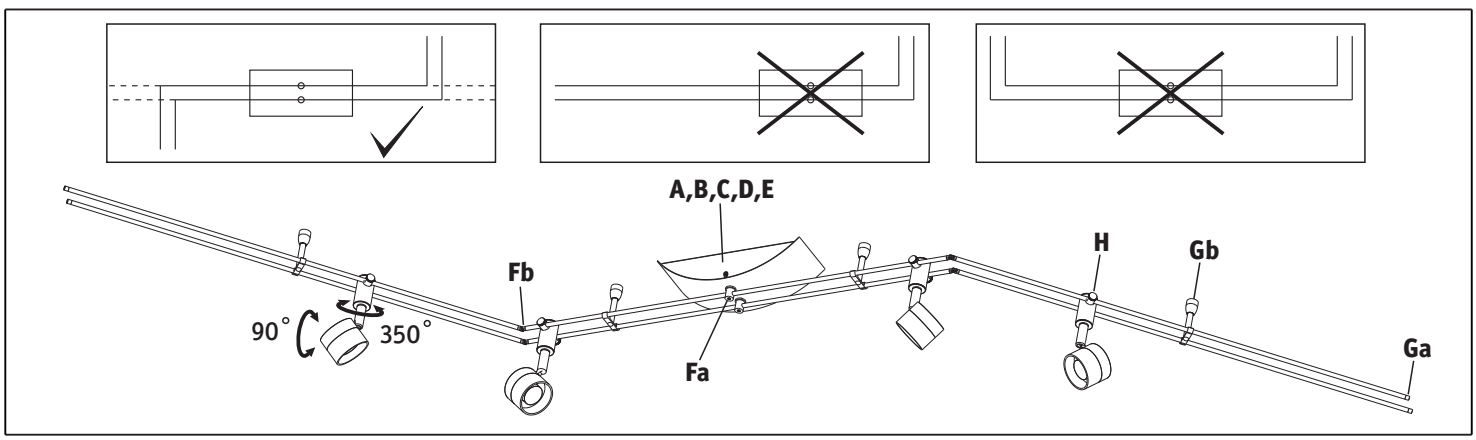
PKE 03/14