CATANIA
ISO STANDARD+

Art 122 038.2

TENE

3 roll | 10 packs

Double Glazed
ISO-Verglasung
Lämpölasit
Isolerglas

tene_gardenhouses

Tene Kaubandus aiamajad

www.tene.ee

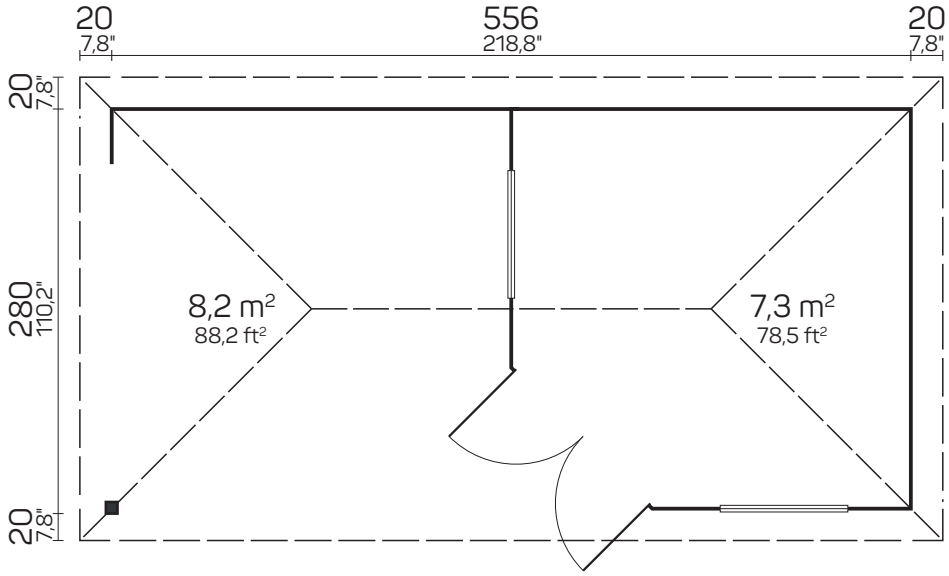

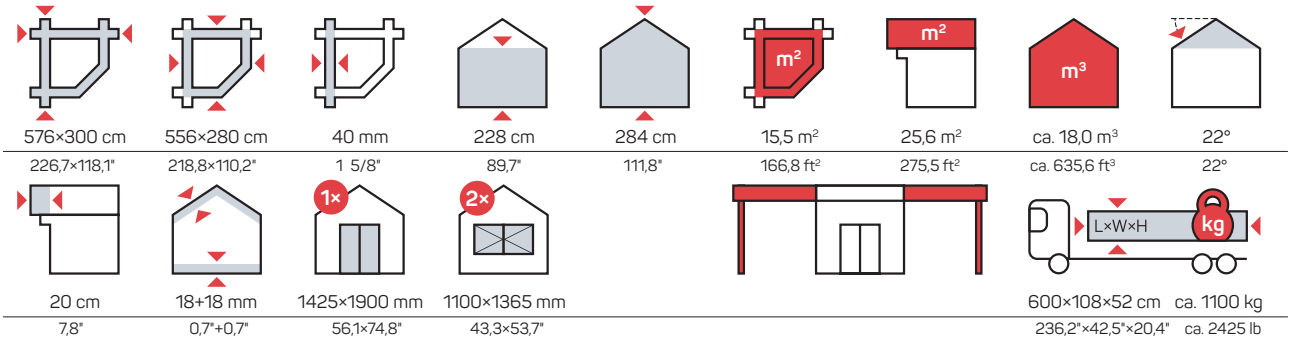

576×300 cm	556×280 cm	40 mm	228 cm	284 cm	15,5 m²	25,6 m²	ca. 18,0 m³	22°
226,7×118,1"	218,8×110,2"	1 5/8"	89,7"	111,8"	166,8 ft²	275,5 ft²	ca. 635,6 ft³	22°
20 cm	18+18 mm	1425×1900 mm	1100×1365 mm				600×108×52 cm	ca. 1100 kg
7,8"	0,7"+0,7"	56,1×74,8"	43,3×53,7"				236,2"×42,5"×20,4"	ca. 2425 lb

Tene Kaubandus OÜ / Lihula mnt 22B, 90510 Haapsalu, Estonia / +372 47 22000 / info@tene.ee