TOBIAS 10m²

WOODEN SHEDS

Art Art 101 007

9 packs

TENE

tene_gardenhouses

Tene Kaubandus aiamajad

www.tene.ee

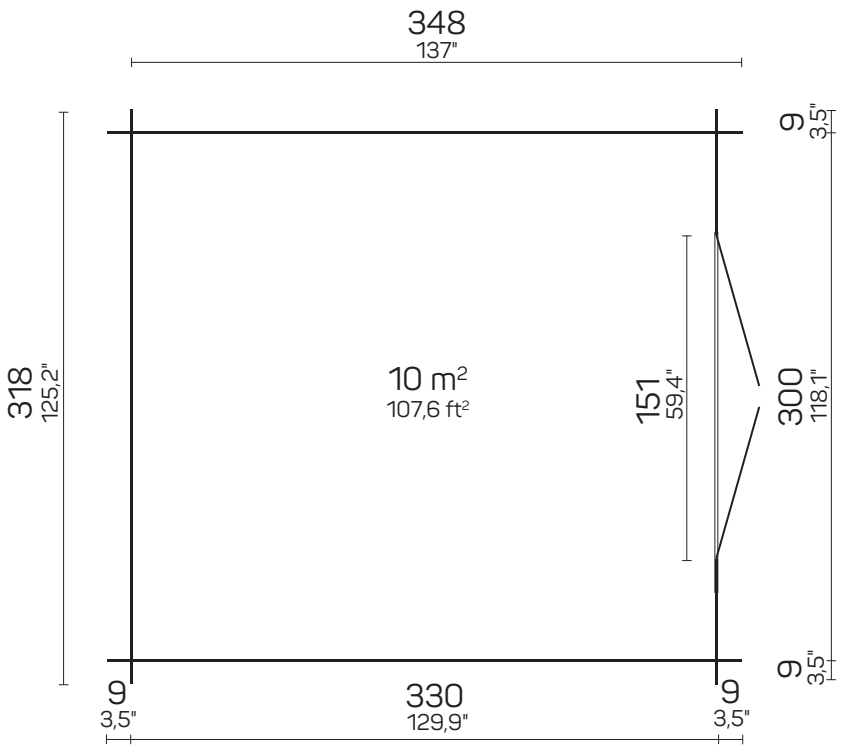

318×348 cm	300×330 cm	40 mm	179 cm	268 cm	9,9 m²	21,5 m²	19,7 m³	24°
125,2×137"	118,1×129,9"	1 5/8"	70,4"	105,5"	10,5,9 ft²	230 ft²	695,4 ft³	24°
36 cm	18 mm	without floor or	1510×1650 mm					
14,1"	0,7"	32 mm / 1,2"	59,4×64,9"					

without floor	415×115×50 cm	ca. 750 kg
with floor	415×115×67 cm	ca. 1020 kg
	163,3"×45,2"×19,6"	ca. 1653 lb
	163,3"×45,2"×26,3"	ca. 2248 lb

Tene Kaubandus OÜ / Lihula mnt 22B, 90510 Haapsalu, Estonia / +372 47 22000 / info@tene.ee