TOBIAS 6m²

WOODEN SHEDS

Art Art 101 006

6 packs

TENE

tene_gardenhouses

Tene Kaubandus aiamajad

www.tene.ee

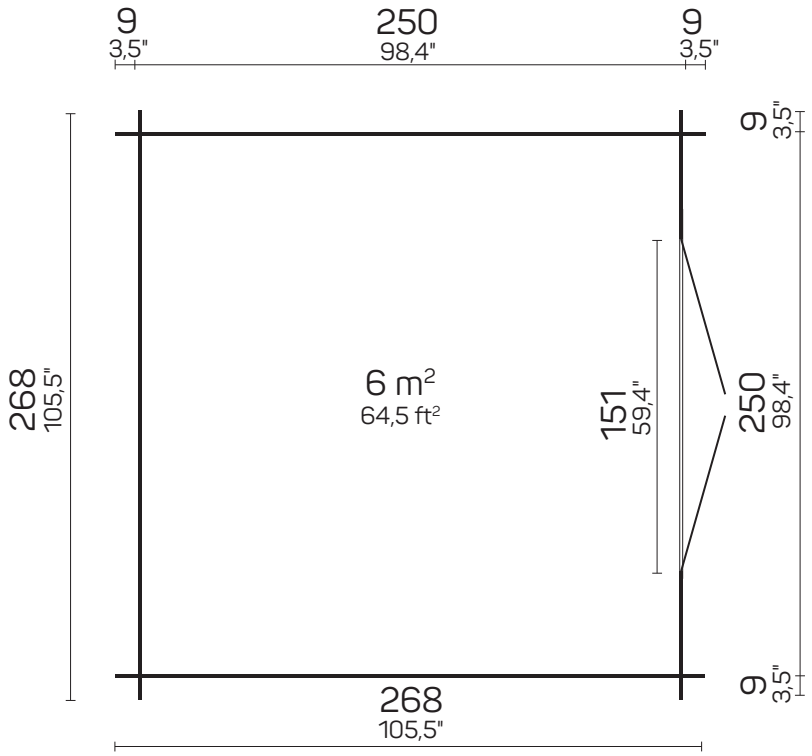

268×268 cm	250×250 cm	40 mm	179 cm	252 cm	6,25 m²	15 m²	12,3 m³	23°
105,5×105,5"	98,4×98,4"	1 5/8"	70,4"	99,2"	66,8 ft²	160,5 ft²	434,1 ft³	23°
36 cm	18 mm	without floor or	1510×1650 mm					
14,1"	0,7"	32 mm / 1,2"	59,4×64,9"					

without floor	335×115×60 cm	ca. 600 kg
with floor	335×115×65 cm	ca. 780 kg
	131,8"×45,2"×23,6"	ca. 1322 lb
	131,8"×45,2"×25,5"	ca. 1719 lb

Tene Kaubandus OÜ / Lihula mnt 22B, 90510 Haapsalu, Estonia / +372 47 22000 / info@tene.ee