HeatMex WiFi 500 W / 750 W

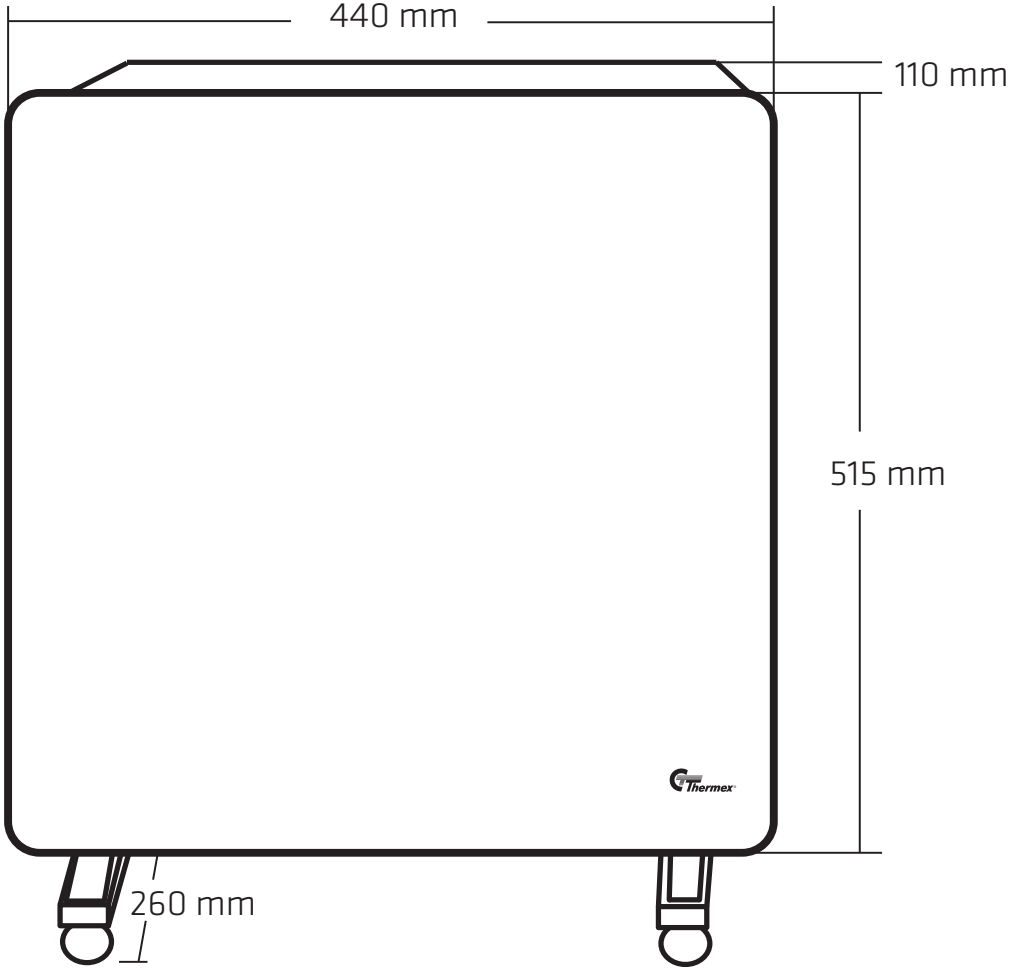

Revisionsdato: 10.05.2021